Haier

Indoor Unit Operation & Installation Manual

ORIGINAL MANUAL

English

AF052MBERA

AF072MBERA

AF092MBERA

AF122MBERA

AF162MBERA

AF182MBERA

No. 0150533111

- Please read this manual carefully before using
- Keep this operation manual for future reference

Original instructions

User Manual

The indoor unit, suspended to ceiling or standing on floor, renders considerable operating ease and flexibility.

With its ultra-thin design, dazzling exterior and space economy, the indoor unit fits in well with indoor scenarios.

Boasting superb power and fast temperature tuning, the indoor unit delivers undeniable comforts and pleasures whenever you feel like wanting the same.

Highly efficient silencing technology greatly reduces operating noises and delivers natural comforts.

In case of sudden blackout during operation, the indoor unit, with its Blackout Retrieval function preset, is capable of retrieving its operating status prior to the blackout when power supply is restored.

Integrated Control is available with the indoor unit (through integrated controller).

Multi-connected unit series features “uniform control mode”, i.e., all indoor units are restricted to run on heating or cooling mode at the same time.

For the protection of compressor, the air conditioning unit shall be powered for over 12 hours.

Contents

Operating Range of Air Conditioner

cooling dry	indoor	max.	DB: 32℃ WB: 23℃
		min.	DB: 18℃ WB: 14℃
	outdoor	max.	DB: 43℃ WB: 26℃
		min.	DB: -5℃
heating	indoor	max.	DB: 27℃
		min.	DB: 15℃
	outdoor	max.	DB: 21℃ WB: 15℃
		min.	DB: -15℃

Warning

- If the supply cord is damaged, it must be replaced by the manufacturer, its service agent or similarly qualified persons in order to avoid a hazard.
- This appliance is not intended for use by persons (including children) with reduced physical, sensory or mental capabilities, or lack of experience and knowledge, unless they have been given supervision or instruction concerning use of the appliance by a person responsible for their safety.
- Children should be supervised to ensure that they do not play with the appliance.
- This appliance can be used by children aged from 8 years and above and persons with reduced physical, sensory or mental capabilities or lack of experience and knowledge if they have been given supervision or instruction concerning use of the appliance in a safe way and understand the hazards involved. Children shall not play with the appliance. Cleaning and user maintenance shall not be made by children without supervision.
- The appliances are not intended to be operated by means of an external timer or separate remote-control system.
- Keep the appliance and its cord out of reach of children less than 8 years.

Parts

Indoor unit

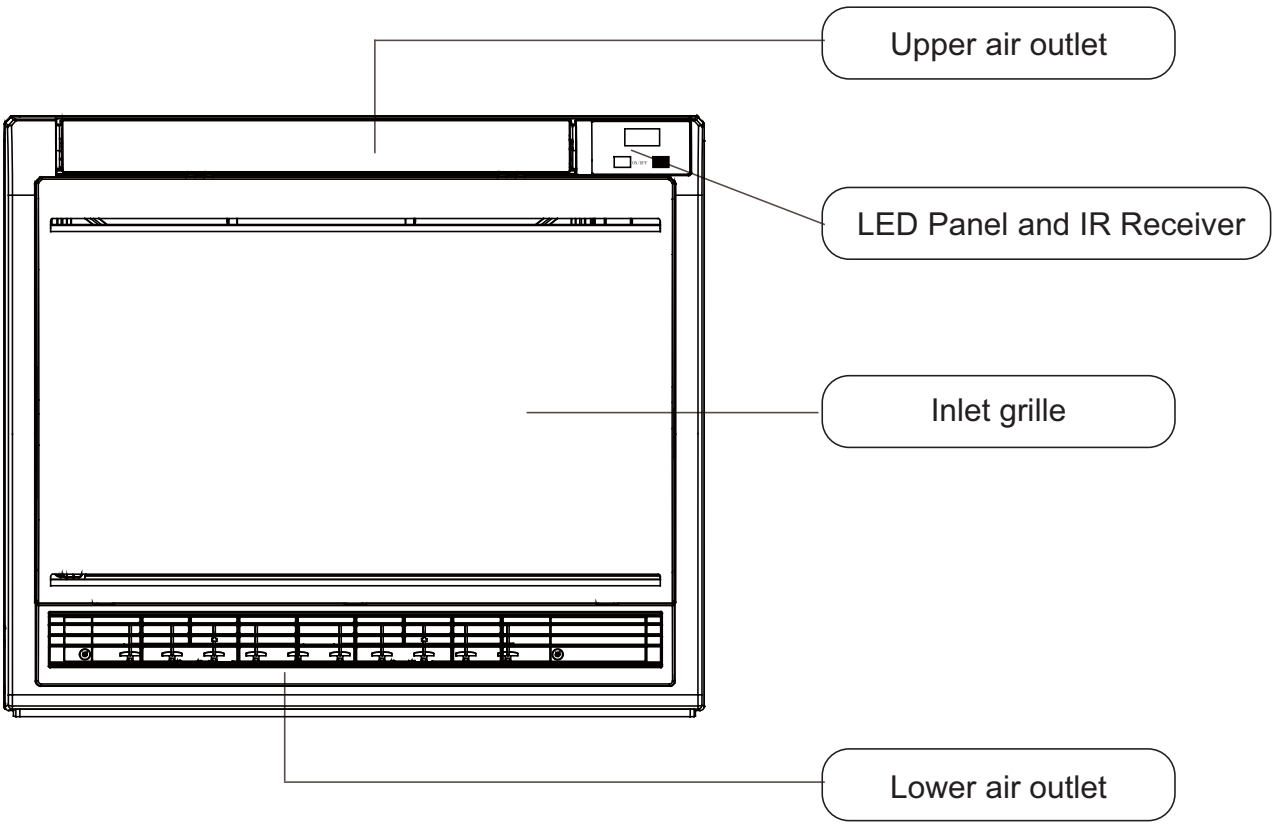

Safety

- If the air conditioner is transferred to a new user, this manual shall be transferred to the user, together with the conditioner.
- Before installation, be sure to read Safety Considerations in this manual for proper installation.
- The safety considerations stated below is divided into "⚠ Warning" and "⚠ Attention". The matters on severe accidents caused from wrong installation, which is likely to lead to death or serious injury, are listed in " ⚠ Warning". However, the matters listed in " ⚠ Attention" are also likely cause the severe accidents. In general, both of them are the important items related to the security, which should be strictly abided by.
- After the installation, perform test run to make sure everything is in normal conditions, and then operate and maintain the air conditioner in accordance with the User Manual. The User Manual should be delivered to the user for proper keeping.

⚠ Warning

- Please ask the special maintenance station for installation and repair. Water leakage, electric shocks or fire accidents might be caused from improper installation if you conduct the installation by your own.
- The installation should be conducted properly according to this manual. Water leakage, electric shocks or fire accidents might be caused from improper installation.
- Please make sure to install the air conditioner on the place where can bear the weight of the air conditioner. The air conditioner can't be installed on the grids such as the non-special metal burglar-proof net. The place with insufficient support strength might cause the dropdown of the machine, which may lead to personal injuries.
- The installation should be ensured against typhoons and earthquakes, etc. The installation unconformable to the requirements will lead to accidents due to the turnover of the machine.
- Specific cables should be used for reliable connections of the wirings. Please fix the terminal connections reliably to avoid the outside force applied on the cables from being impressed on the cables. Improper connections and fixings might lead to such accidents as heating or fire accidents.
- Correct shapes of wirings should be kept while the embossed shape is not allowed. The wirings should be reliably connected to avoid the cover and the plate of the electrical cabinet lipping the wiring. Improper installation might cause such accidents as heating or fire accidents.
- While placing or reinstalling the air conditioner, except the specific refrigerant (R410A), don't let the air go into the refrigeration cycle system. The air in the refrigeration cycle system might lead to the cracking or personal injuries due to abnormal high pressure of the refrigeration cycle system.
- During installation, please use the accompanied spare parts or specific parts. If not, water leakage, electric shocks, fire accidents or refrigerant leakage might be caused.
- Don't drain the water from the drainpipe to the waterspout where may exist harmful gases such as sulfureted gas to avoid the harmful gases entering into the room.
- During installation, if refrigerant leakage occurs, ventilation measures should be taken, for the refrigerant gas might generate harmful gases upon contacting the flame.
- After installation, check if any refrigerant leakage exists. If the refrigerant gas leaks in the room, such things as air blowing heaters and stoves, etc. may generate harmful gases.

Safety

- Don’t install the air conditioner at the places where the flammable gases may leak. In case the gas leakage occurs around the machine, such accidents as fire disasters may be caused.
- The drainpipe should be properly mounted according to this manual as to ensure the smooth drainage. In addition, heat preservation should be taken to avoid condensation. Improper drainpipe mounting might cause water leakage, which will get the articles at home wet.
- The refrigerant gas pipe and liquid pipe should be heat insulated to preserve heat. For inappropriate heat insulation, the water caused from the condensation will drop to get the article at home wet.

⚠ Attention

- The air conditioner should be effectively grounded. Electric shocks may occur if the air conditioner is ungrounded or inappropriately grounded. The wire for earthing shouldn’t be connected to the connections on the gas pipe, water pipe, lightning rod or telephone.
- The breaker for electricity leakage should be mounted. If not, accidents such as electric shocks may happen.
- The installed air conditioner should be checked for electricity leakage by being powered.
- If the ambient humidity bigger than 80%, when the water discharge hole be blocked or the filter becomes dirty, or airflow speed change, there maybe leads to condensing water drop down, and at the same time there maybe some drops of water spit out.

Safety

!	Items with this warning sign concerning the product's safety and the personal security must be performed strictly.
⊘	Items with this forbidding sign refer to absolutely forbidden behaviors. If not, they may cause machine damage or endanger operator's personal safety.

Clean the filter regularly.
Cooling or heating performance will be degraded if the filter is blocked, resulting in large power consumption, failure, and water dripping at freezing.

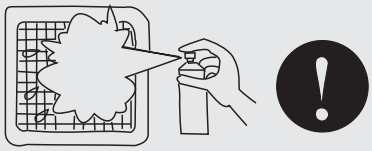

Don't touch the outlet while the flap is moving. Don't put anything in the grid in case danger may occur.

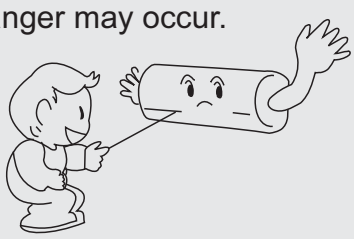

Avoid cold wind from blowing out.
During heating running, the fan of indoor units will not rotate immediately as to prevent cold wind from blowing out.

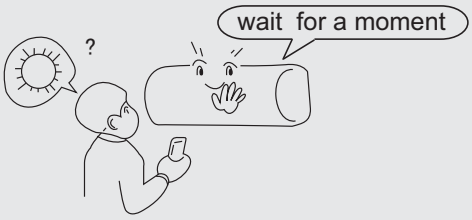

Changing Wind Speeds:
In the state of refrigerating, with automatic blowing mode, the wind speed automatically decreases when the room temperature approaches the setting.
In the state of heating, when the room temperature reaches the setting temperature the compressor stops working and the fan turns to low wind or stops. Wind speed changes automatically in the dehumidifying mode.

Regulating Wind Direction:
It is recommended not to make the wind deflector downwards for a long time to avoid condensation at air outlet port during refrigerating or dehumidifying.
Water dropping might appear at the air outlet port in refrigerating or dehumidifying mode.

Defrosting:
During heating running, the air conditioner would defrost automatically if there is frost on heat exchanger of outdoor units.
Do not rotate fans of both indoor units and outdoor units during defrosting.
After finishing defrosting, the air conditioner will resume running automatically.

The machine operation must be controlled by the control.

Hints:
As air conditioners absorb heat from the environment and release it to the room, heating effects will be influenced by the temperature in and out of the room.

Safety

Notices during Operation

Attention

- It is not allowed to put any heating apparatus under the indoor units, for the heat may cause distortion of the units.
- Pay attention to the aeration condition to avoid anoxic symptom.

- Flammable apparatus should not be placed in the place where the air conditioner wind could reach directly, or incomplete burning of the apparatus may be caused.

- Check the mount table of the air conditioner for damage for a long period of operation.
  If placed on the damaged table, the unit may drop down causing damage.
- Plants and animals should not be put to the place where wind of the air conditioner blows directly, otherwise damage to them may be caused.
- It cannot be used for the preservation of food, living creature, precise instrument and artworks, etc, otherwise damage may occur.
- Use the fuse with proper capacity. Metal wires and copper wires, etc., may cause fire or other faults.
- Do not use water heater or like next to the indoor unit and the wired controller. Water/power leakage or short circuit may happen if the steam generating apparatus is working next to machine.
- Defrosting during heating
  To improve the heating effect, the outdoor unit will perform defrosting automatically when frost appears on the outdoor unit during heating (approximately 2-10 min). During defrosting, the fan of the indoor unit runs at a low speed or stops while that of the outdoor unit stops running.
- Power should be cut off when the air conditioner is left unused for a long period. Power will be consumed if the air conditioner is not powered off. The power switch of the outdoor unit switch should be powered on 12 hours in advance before operation to protect the unit after a long period of storage.
- 3-minute protection
  To protect the unit, compressor can be actuated with at least 3-minute delay after stopping.
- Close the window to avoid outdoor air getting in.
  Curtains or window shutters can be put down to avoid the sunshine.

- Do not touch the switch with the wet hand to avoid power shock.
- Stop running and switch off the manual power switch when cleaning the unit.
- During the operation of the control unit, don't switch off the manual power switch and the controller can be used. Please do not press the liquid crystal zone of controller to prevent damage
- Cleaning the unit with water may cause electric shock.

- Do not put flammable spray close to the air conditioner.
  Don't inject flammable spray towards the air conditioner, which may cause fire.
- Stopping fan rotation
  The unit which stops operating will actuate the fan for a 2-8 min swing every 30-60 minutes for protecting the unit while other indoor unit are in the operating state.
- This appliance is not intended for use by persons (including children) with reducedphysical, sensory or mental capabilities, or lack of experience and knowledge, unless they have been given supervision or instruction concerning use of the appliance by a person responsible for their safety.

Operation hints

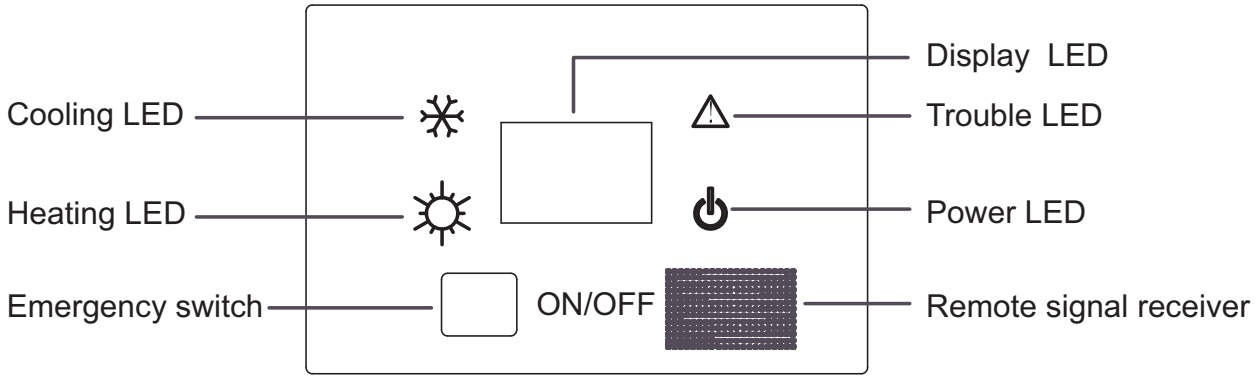

Emergency operation of indoor unit

- When the remote controller is lost or damaged, the emergency switch can be operated under the panel. (as shown in the figure).
- In the OFF state, pressing the emergency switch can turn on automatic operation. Air conditioning automatically selects operation mode according to indoor temperature (cooling or heating).
- However, temperature setting and wind speed can not be changed. In the ON state, press this button to stop the air conditioner.

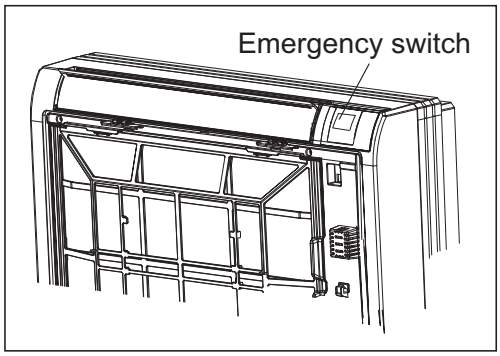

Indoor air supply control

⚠CAUTION

- Before opening the front frille, be sure to stop the operation and tum the breaker OFF.
- Do not touch the metal parts on the inside of the indoor unit, as it may result in injury.

- Regardless of the operating mode or situation, air blows from the upper air outlet.

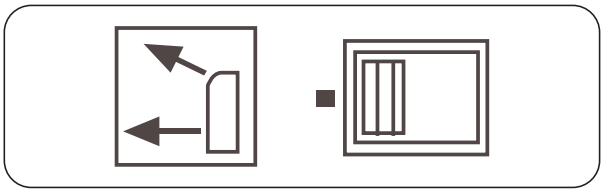

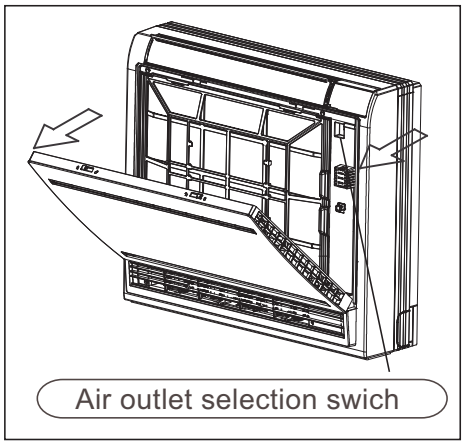

- Use this swich when you do not want air coming out of lower air outlet. (While sleeping etc..)
- It is recommended to use the upper air outlet mode when the lower air outlet mode makes people feel uncomfortable or when the dehumidification mode is used.

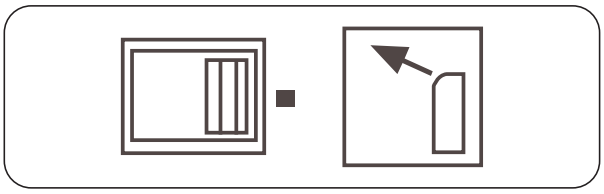

Operation hints

EMERGENCY OPERATION AND TEST OPERATION

EMERGENCY OPERATION

Carry out ghis operation only when the remote controller is defective or lost.

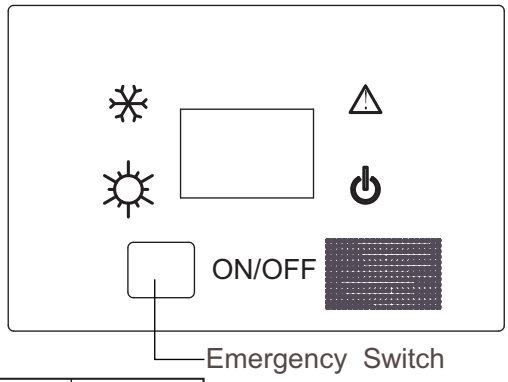

Unit start

When the emergency operation switch is pressed, a sound you can hear, which means the start of this operation.

Follow the requriements below.

Room temperature	Designated temperature	Timer mode	Air flow speed	Operation mode	Anion
＞23℃	26℃	None	AUTO	COOL	None
≤23℃	23℃	None	AUTO	HEAT	None

Unit stop (to cancel emergercy operation)

Press the emergency switch and hear a sound, the unit stops.

TEST OPERATION

Use this switch in the test operation when the room temperature is less than 16 °C, do not used it in the normal operation.

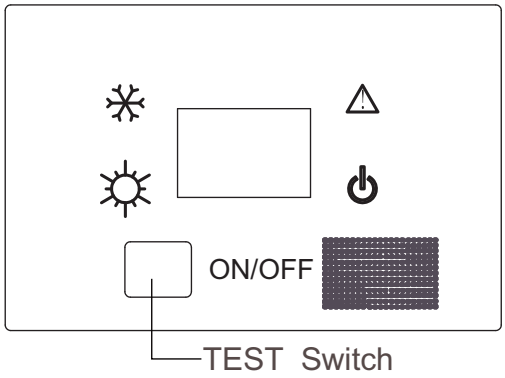

Unit start

Continue to press the test operation switch for more than 5 seconds. After you hear the "BI" sound twice, release your finger from the switch, the test operation starts and the air conditioner srarts with the air flow speed setting "HI".

Unit stop (to cancel test operation)

Push the test run switch or operate with remote controller to cancel the test run.
If you use the remote controller to cancel the test run, the conditioner will then run as per the working mode displayed on the remote controller.

Power failure resume (please set and apply as necessary)
With setting of power failure resume, if sudden power failure occurs, the unit will resume original operation when power is supplied again.
Setting method:
with ON of remote controller (except TIMER and FAN),repeatedly press SLEEP button 10 times in 5 seconds,after 4 Beep from the buzzer,the unit comes into power failure resume mode.
To cancel:
press SLEEP button continuously 10times in 5 seconds,the buzzer sounds Beep twice and power failure resume function is canceled.
Note:
When sudden power failure happens during unit operation in power failure resume mode, if the air conditioner is not desired for use in a long period, please shut off the power supply in case that the unit automatically resume operation when power is re-supplied, or press ON/OFFto turn off the unit when power resumes.

Operation hints

Special function

A. Emergency switch:
a) Press the emergency switch in stop condition, indoor unit operate with AUTO, AUTO SPEED, 24℃ Setting modes, pressure the emergency switch in start condition, indoor unit will stop operation.
b) Malfunction history list checking: In cooling or heating mode, using the remote controller set automatic wind speed, press Press SWING button 6 times can query the recent history of fault, the times the buzzer rang or timing lights flashing times stands for a recent fault code .

B. Temp. consumption:
The heating mode, the temp. compensation range is -14 ~ 0℃.
Set the temp. consumption in Heating mode with remote controller, heating mode ,set 30℃ as the reference point, press the sleep butter 7 times, the buzzer ring 2 times, the unit enter temp. consumption condition. Temp. consumption data=current temp.-30℃
In the cooling mode, the temp. compensation range is -7 ~ +7 ℃.
Set the temp. consumption in Cooling mode with remote controller, cooling mode ,set 23℃ as the reference point, press the sleep butter 7 times in 5 seconds , the buzzer ring 2 times, the unit enter temp. consumption condition. Temp. consumption data=current temp.-23℃

C. Compulsive Defrost:
In heating mode, setting high speed ,set temp. is 30℃, press sleep button for 6 times, buzzer short ring 3 times, unit enter manual defrost mode..

D. Auto start function:
In on condition ,press the sleep button 10 times within 5 seconds, buzzer short ring 4 times stands for enter auto restart function; press the sleep button 10 times within 5 seconds, buzzer short ring 2 times stands for exit auto restart function .
The memory information: on/off condition, mode, fan speed, setting temp., swing position.

E. Room card Function:
Room card function can realize by remote controller.
Press the light button 12 times with remote controller,if the buzzer rings 4 times that the room card is valid, if the buzzer rings 2 times that the room card is invalid.

Note:
If the wired controller is selected, then the implementation of special functions of A, B, C and D can refer to the wired controller manual. E function shall be set up by the installation personnel during debugging and installation.

Maintenance

Cleaning of the unit

Turn off the power switch	Do not touch with wet hand	Do not clean with hot water or solvent
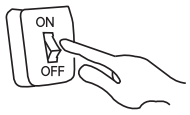	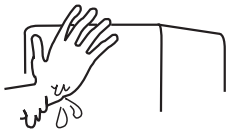	

Take off the air inlet grill
First switch off the power supply,take off the screw cap,loosen the screw with cross screwdriver.

Clean the filter
Use water or vacuum cleaner to remove dust. If it is too dirt, clean with detergent or neutral soap water. Rinsing with fresh water, dry the filter and re-assemble.

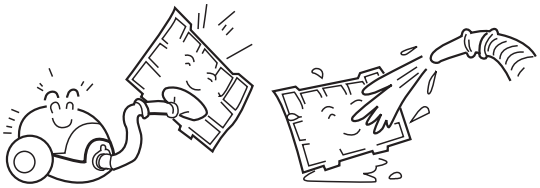

Caution:
Do not wash filter in hot water above 40°C, which will damage the filter.
Do carefully wipe the filter.

Clean the indoor(outdoor) unit
Clean with warm cloth or neutral detergent,then wipe away moisture with dry cloth. Do not use too hot water(above 40°C),which will cause discoloration or deformation. Do not use pesticide or other chemical detergents.

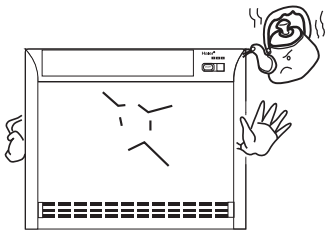

Maintenance at the end of application season

On a fine day, unit shall be started and operate in FAN mode for about half a day until the inside of the unit becomes thoroughly dry.

Turn off the unit operation switch and power on/off. Otherwise,there will be some electricity consumption even the unit is in stop status.

Clean the filter and indoor,cover the units well.

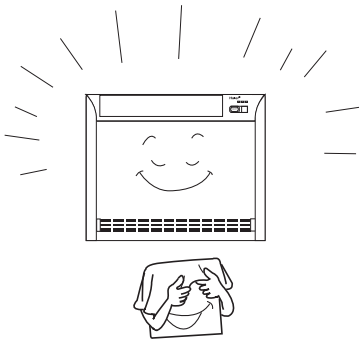

Maintenance before beginning of application season

Check there are no obstacles in the air inlet and outlet to avoid impairing of working efficiency.

Please do attach the air filter to ensure the electrostatic filters not soiled.Otherwise,dirt will come into and damage the unit or bring failures.

Fault Checkup

Before asking for service, check the following first.

	Phenomenon	Cause or check points
Normal Performance inspection	The system does not restart immediately. 	• When unit is stopped, it won't restart immediately until 3 minutes have elasped to protect the system. • When the electric plug is pulled out and reinserted, the protection circuit will work for 3 minutes to protect the air conditioner.
	Noise is heard: 	• During unit operation or at stop, a swishing or gurgling noise may be heard. At first 2-3 minutes after unit start, this noise is more noticeable. (This noise is generated by refrigerant flowing in the system.) • During unit operation, a cracking noise may be heard. This noise is generated by the casing expanding or shrinking because of temperature changes. • Should there be a big noise from air flow in unit operation, air filter may be too dirty.
	Smells are generated.	• This is because the system circulates smells from the interior air such as the smell of furniture, cigarettes.
	Mist or steam are blown out.	• During COOL or DRY operation, indoor unit may blow out mist. This is due to the sudden cooling of indoor air.
Multiple check	Does not work at all.	• Is power plug inserted? • Is there a power failure? • Is fuse blown out?
	Poor cooling 	• Is the air filter dirty? Normally it should be cleaned every 15 days. • Are there any obstacles before inlet and outlet? • Is temperature set correctly? • Are there some doors or windows left open? • Is there any direct sunlight through the window during the cooling operation?(Use curtain) • Are there too much heat sources or too many people in the room during cooling operation?

Installation Procedures

CAUTIONS:

To ensure proper installation, read "Cautions" carefully before working. After installation, start the unit correctly and show customers how to operate and maintain the unit.

Meanings of Warning and Cautions:

⚠ **WARNING:** Serious injury or even death might happen, if it is not observed.

⚠ **CAUTION:** Injury to people of damages to machine might happen, if it is not observed.

⚠ **WARNING:**

- Installation shall be done by professional people, don't install unit by yourself. Incorrect installation will cause water leakage, electric shock or fire.
- Install unit as per the Manual. Incorrect installation will cause water leakage, electric shock or fire accident.
- Be sure to use specified accessaries and parts. Otherwise, water leakage, electric shock, fire accident or unit falling down may happen.
- Unit should be placed on a place strong enough to hold the unit. Or, unit will fall down causing injuries.
- When install the unit, take in consideration of storms, typhoom, earthquake. Incorrect installation may cause unit to fall down.
- All electric work shall be done by experienced people as per eocal code, regulations and this Manual.
- Use exclusive wire for the unit. Incorrect installation or undersized electric wire may cause electric shock or fire accident.
- All the wires and circuit shall be safe. Use exclusive wire firmly fixed. Be sure that external force will not affect terminal bolck and electric wire. Poor contact and installation may cause fire accident.
- Arrange wire correctly when connectin indoor and outdoor power supply. Fix terminal cover firmly to avoid overheat, electric shock or even fire accident.
- In case retrigerant leakage occurred during unit installation, keep a good ventilation in the room.
- Poisonous gas will occur when meet with fire.
- Check the unit upon installation. Be sure there is no leakage. Refrigerant will induce poisonous gas when meet heat source as heater, oven, etc.
- Cut power supply before touching terminal bolck.

Installation Procedures

⚠ **CAUTION:**

- Unit shall be grounded. But grounding shall not be connected to gas pipe water pipe, telephone line. Poor grounding will cause electric shock.
- Be sure to install a leakage breaker to avoid electric shock.
- Arrange water drainage according to this Manual. Cover pipe with insulation materials in case dew may occur. Unproper installation of water drainage will cause water leakage and wer your furniture.
- To maintain good picture or reduce noise, keep at least 1 m from T.V. radio, when install indoor and outdoor unit, connecting wire and power line. (If the radio wave is relatively strong, 1 m is not enough to reduce noise).
- Don't install unit in following places:
  (a) Oil mist or oil gas exists, such as kitchen, or, plastic parts may got aged, or water leakage.
  (b) Where there is corrosive gas. Copper tube and welded part may be damaged due to corrosion, causing leakage.
  (c) Where there is strong radiation. This will affect unit's control system, causing malfunction of the unit
  (d) Where flamable gas, dirt, and volatile matter (thinner, gasoline) exist, These matter might cause fire accident.
- Refer to paper pattern when installing unit.


Earthing

Cautions for the installation personnel
Don't fail to show customers how to operate unit.

BEFORE INSTALLATION <Don't discard any accessories until comp>

- Determine the way to carry unit to installation place.
- Don't remove packing until unit reaches installation place.
- If unpacking is unkavoidable, protect unit properly.

SELECTION OF INSTALLATION PLACE

Installation place shall meet the following and agreed by customers:

- Place where proper air flow can be ensured.
- No block to air flow.
- Water drainage is smpoth.
- Place strong enough to support unit weight.
- Place where inclination is not evident on ceiling.
- Enough space for mainenance.
- Indoor and outdoor unit piping length is within limit. (Refer to Installation Manual for outdoor unit.)
- Indoor and outdoor unit, power cable, inter unit cable are at least 1 m away fromT.V. radop. This is helpful to avoid picture disturbance and noise. (Even if 1 m iskept, noise can still appear if radio wave is strong)

Installation Procedures

DRAWING FOR THE INSTALLATION OF INDOOR UNITS

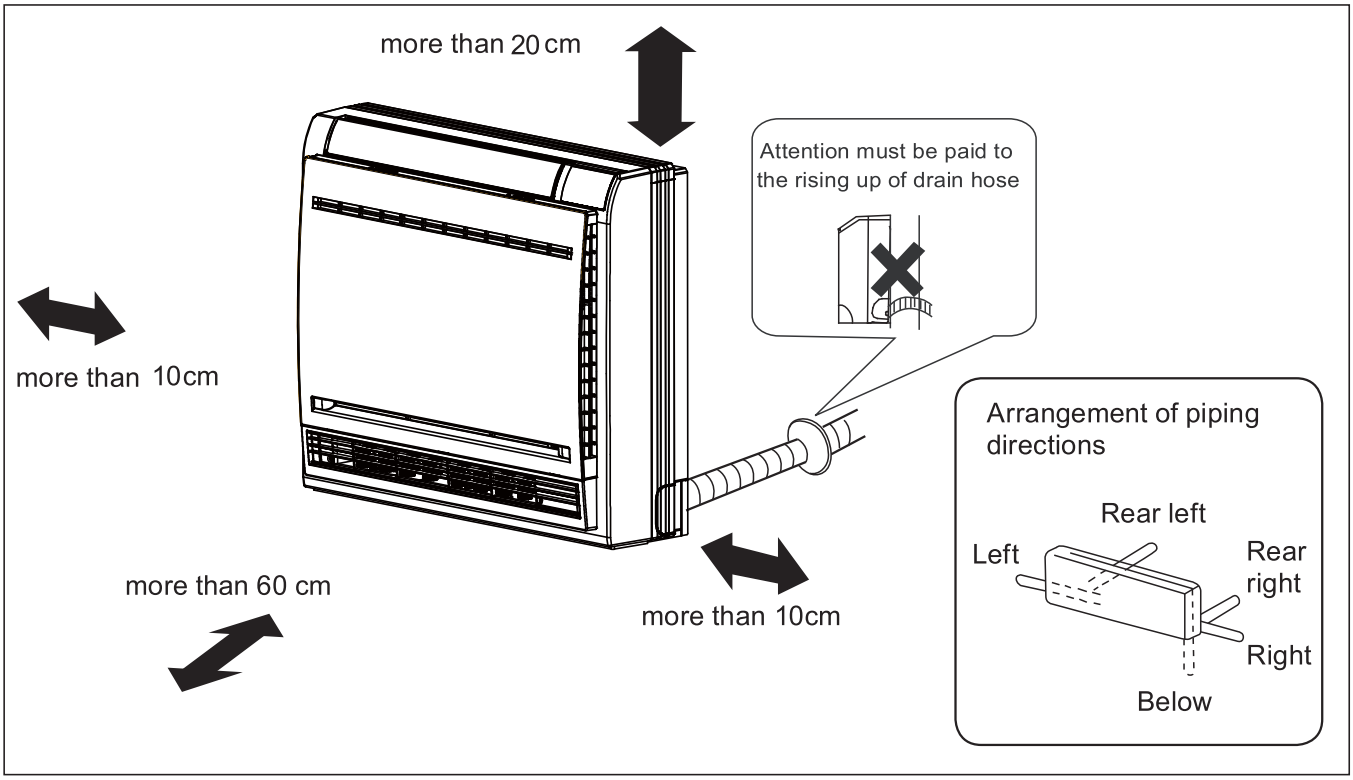

Indoor Unit Installation

(1) Making a Hole on the Wall and Fitting the Piping Hole Cover

- Make a hole of 55mm in diameter, slightly descending to outside the wall.
- Install piping hole cover and seal it off with putty after installation.

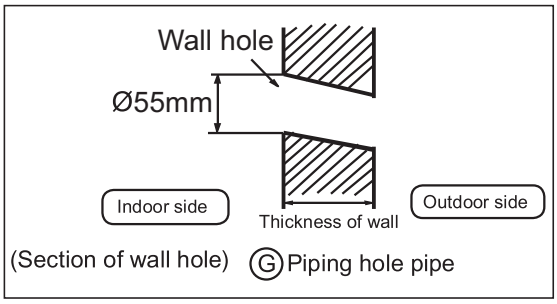

(2) Installation of the Indoor Unit

Removal of Front Grille

- Hole the front panel by the tabs on the both sides and lift it until it stops with a click.

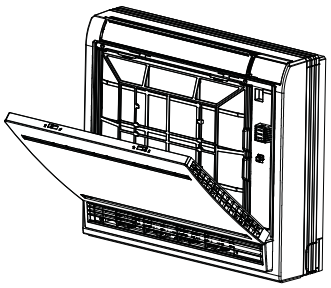

- Loosen the marked four screws and open the grille.

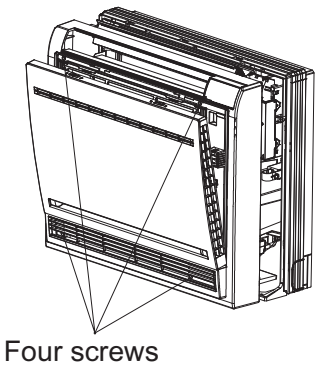

Installation Procedures

Drawing of pipe

[Rear piping]

- Draw pipes and the drain hose, then fasten them with the adhesive tape.

[Left-Left-rear piping]

- In case of left side piping, cut away, with a nipper, the lid for left piping.
- In case of left-rear piping, bend the pipes according to the piping direction to the mark of hole for left-rear piping which is marked on heat insulation materials.

1.Insert the drain hose into the dent of heat insulation materials of indoor unitl.

2.Insert the indoor/outdoor electric cable from backside of indoor unit, and pull it out on the front side, then connect them.

3.Coat the flaring seal face with refrigerant oil and connect pipes.

Cover the connection part with heat insulaiton materials closely, and make sure fixing with adhesive tape.

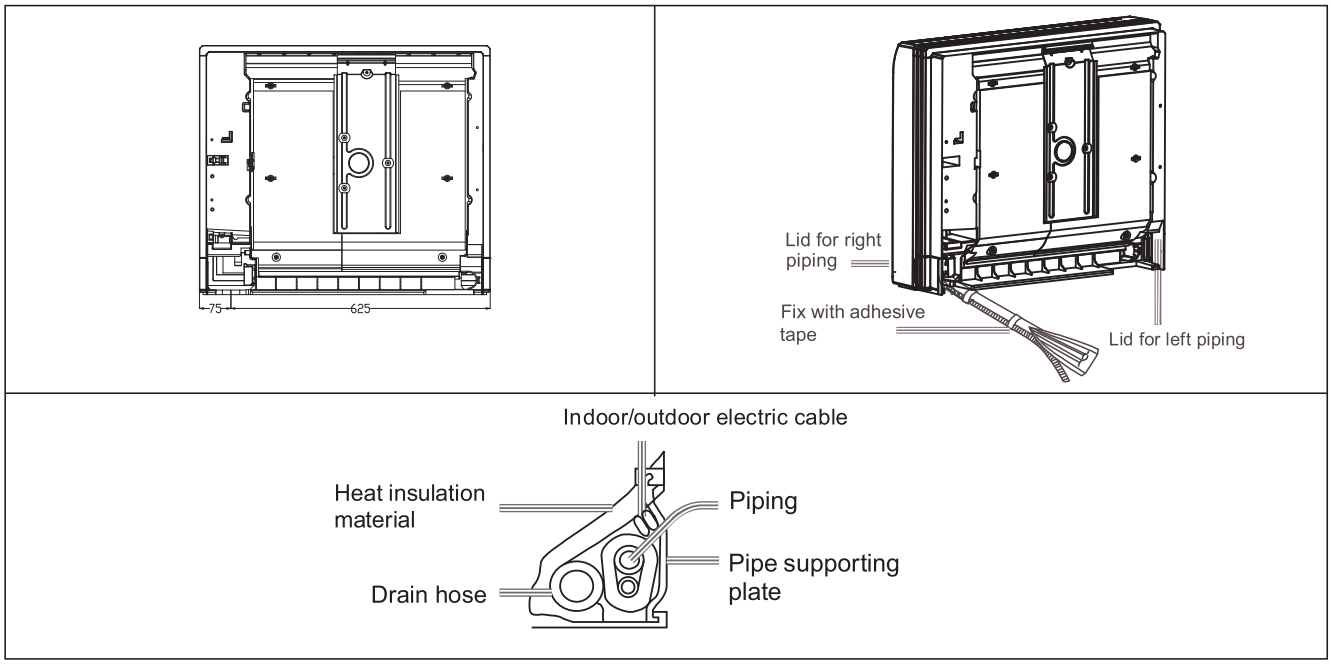

- Indoor/outdoor electric cable and drain hose must be hound with efrigerant piping by protecting tape.

[Other direction piping]

- Cut away, with a nipper, the lid for piping according to the piping direction and then bend the pipe according to the position of wall hole, When bending,be careful not to crash pipes.
- Connect beforehand the indoor/outdoor electric cable, and then pull out the connected to the heat insulation of connecting part specially.

Fixing the indoor unit body

Indoor installation can be done in any of the following two ways:

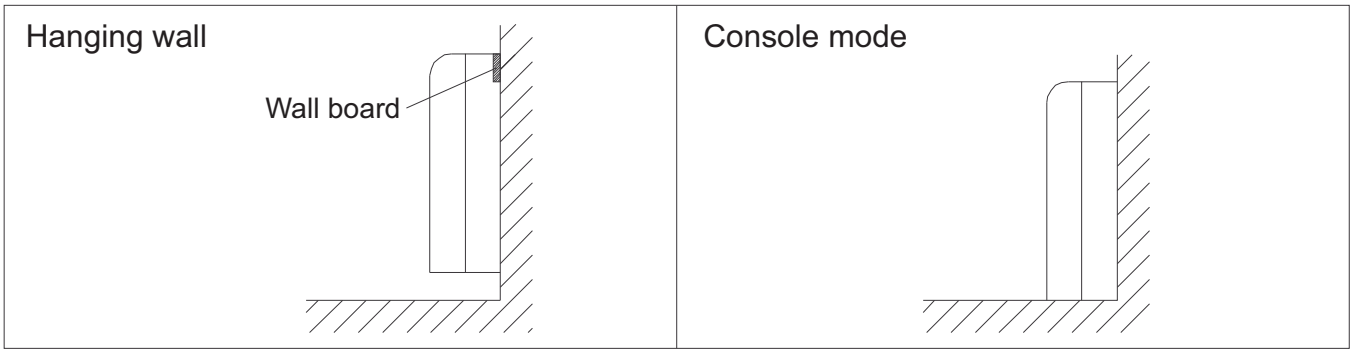

Installation Procedures

- Fix the wall board,then use four screws to fix the unit on the wall. As the figure shown.

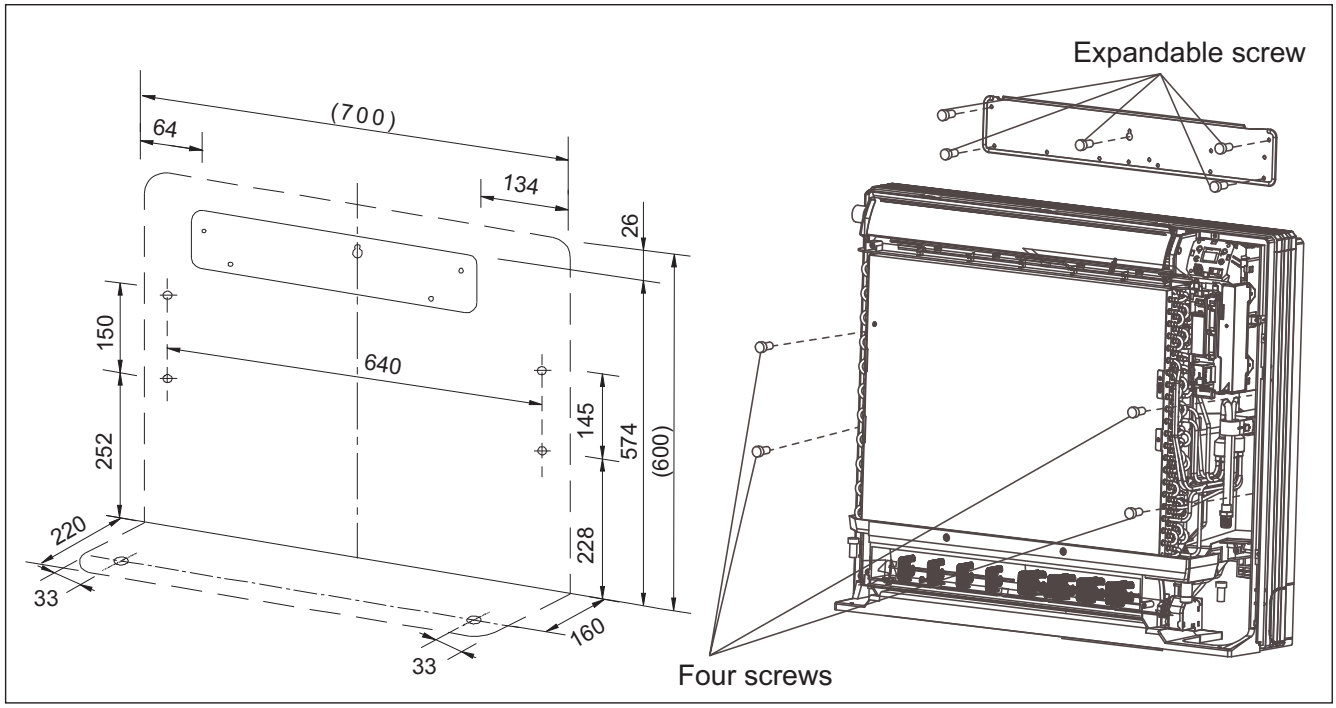

- Remove the front panel, then use two fastening screws to fix the unit on the floor. As the figure shown.

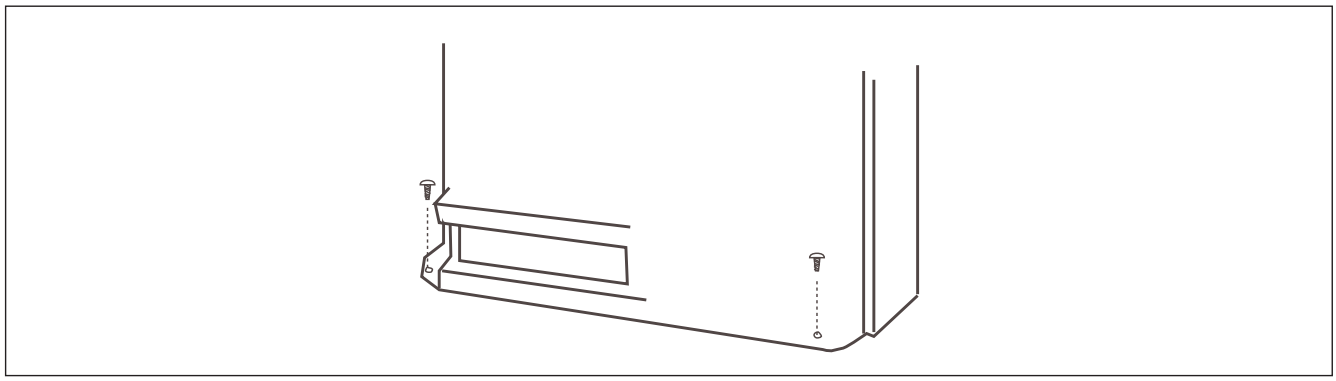

- Once refrigerant piping and drain piping connections are complete, fill the gap of the through hole with putty. Attach the front panel and front grille in their orginal positions once all connections are complete.

REFRIGERANT PIPING

(As for outdoor piping, please refer to installation Manual of outdoor unit.)

- Outdoor is precharged with refrigerant.
- Be sure to see the Fig.1, when connecting and removing piping from unit.
- For the size of the flare nut, please refer to Table 1.
- Apply refrigerant oil at both inside and outsid of lflare nut. Tighten it band tight 3-4 turns then tighten it.
- Use torque specified in Table 1. (Too much force may damage flare nut, causing gas leakage).
- Check piping joints for gas leakage. Insulate piping as shown in Fig. below.
- Cover joint of gas piping and insulator ⑦ with seal.

Installation Procedures

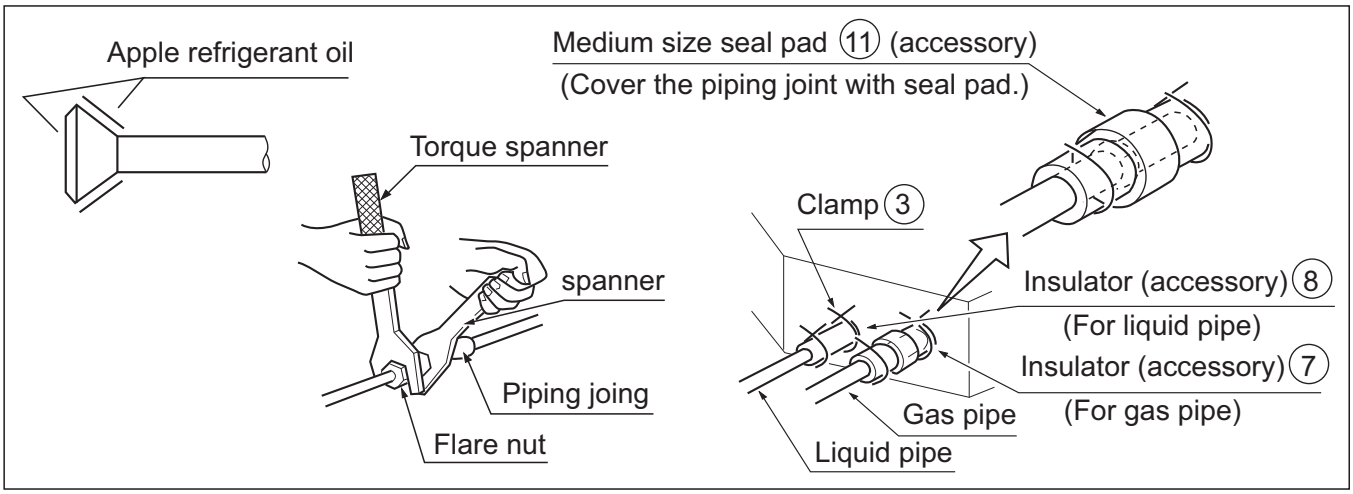

Pipe size

Model	Gas pipe	Liquid pipe
AF052~182MBERA	Ø6.35mm	Ø12.7mm

Table 1

Pipe size	Tighten torque	A(mm)	Flare shape
Ø6.35	1420~1720N.cm (144~176kgf.cm)	8.3~8.7	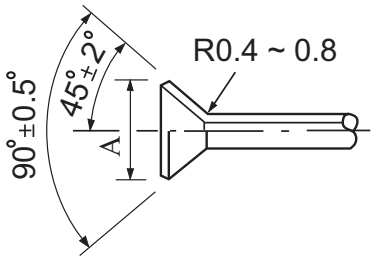
Ø9.52	3270~3990N.cm (333~407kgf.cm)	12.0~12.4	
Ø12.7	4950~6030N.cm (490~500kgf.cm)	12.4~16.6	
Ø15.88	6180~7540N.cm (630~770kgf.cm)	18.6~19.0	
Ø19.05	9720~11860 N.cm (990~1210 kgf.cm)	22.9~23.3	

INSTALLATION OF WATER DRAINAGE PIPE

(1) Install water drainage pipe

- Pipe dia, shall be equal or larger than that of unit piping.(pipe of polyethylene; size: 20mm; O.D:26mm)
- Drain pipe should be short, with a downward slope at least 1/100 to prevent air bag from happening.
- If downward slope can't be made, take other measures to lift it up.
- Please install the drain hose so as to be downward slope without fail.
- Please don’t do the drainage as shown below.
- Please pour water in the drain pan of the indoor unit, and confirm that drainage is carried out surely to outdoor.
- In case that the attached drain hose is in a room, please apply heat insulation to it without fail.

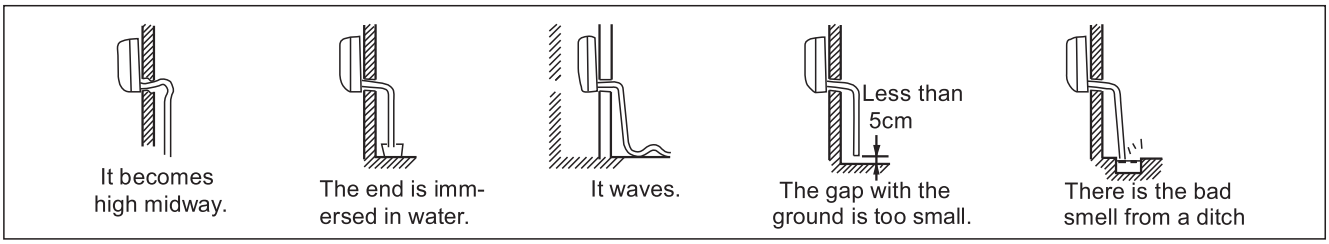

Installation Procedures

- Use the self-provided stiff pipe and clamp with unit. Insert water pipe into water plug until it reaches the white tape.
- Insulate drain hose in the room.

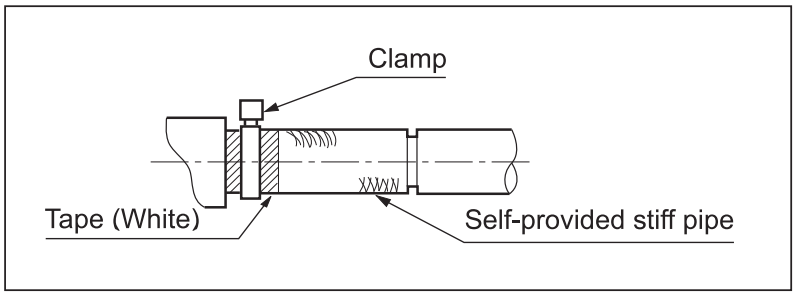

Electrical Wiring

⚠ Warning

- Electrical construction should be made with specific mains circuit by the qualified personnel according to the installation instruction. Electric shock and fire may be caused if the capacity of power supply is not sufficient.
- During arranging the wiring layout, specified cables should be used as the mains line, which accords with the local regulations on wiring. Connecting and fastening should be performed reliably to avoid the external force of cables from transmitting to the terminals. Improper connection or fastness may lead to burning or fire accidents.
- There must be the ground connection according to the criterion. Unreliable grounding may cause electrical shocks. Do not connect the grounding line to the gas pipe, water pipe, lightening rod and telephone line.

⚠ Attention

- Only copper wire can be used. Breaker for electric leakage should be provided, or electric shock may occur.
- The wiring of the mains line is of Y type. The power plug L should be connected to the live wire and plug N connected to null wire while ⏚ should be connected to the ground wire. For the type with auxiliary electrically heating function, the live wire and the null wire should not be misconnected, or the surface of electrical heating body will be electrified. If the power line is damaged, replace it by the professional personnel of the manufacturer or service center.
- The power line of indoor units should be arranged according to the installation instruction of indoor units.
- The electrical wiring should be out of contact with the high-temperature sections of tubing as to avoid melting the insulating layer of cables, which may cause accidents.
- After connected to the terminal tier, the tubing should be curved into be a U-type elbow and fastened with the pressing clip.
- Controller wiring and refrigerant tubing can be arranged and fixed together.
- The machine can't be powered on before electrical operation. Maintenance should be done while the power is shut down.
- Seal the thread hole with heat insulating materials to avoid condensation.
- Signal line and power line are separately independent, which can't share one line. [Note: the power line, signal line are provided by users. Parameters for power lines are shown as below: 3×(1.0-1.5) mm^2; parameters for signal line: 2×(0.75-1.25)mm^2(shielded line)]
- 5 butt lines (1.5mm) are equipped in the machine before delivery, which are used in connection between the valve box and the electrical system of the machine. The detailed connection is displayed in the circuit diagram.

Supply Wiring Drawing

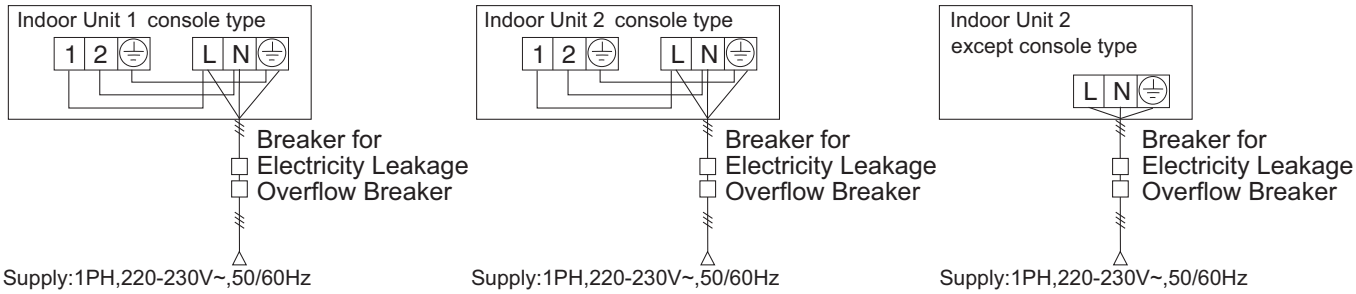

- Indoor units and outdoor units should be connected to the power source separately. Indoor units must share one single electrical source, but its capacity and specifications should be calculated. Indoor & outdoor units should be equipped with the power leakage breaker and the overflow breaker.

Electrical Wiring

Signal Wiring Drawing

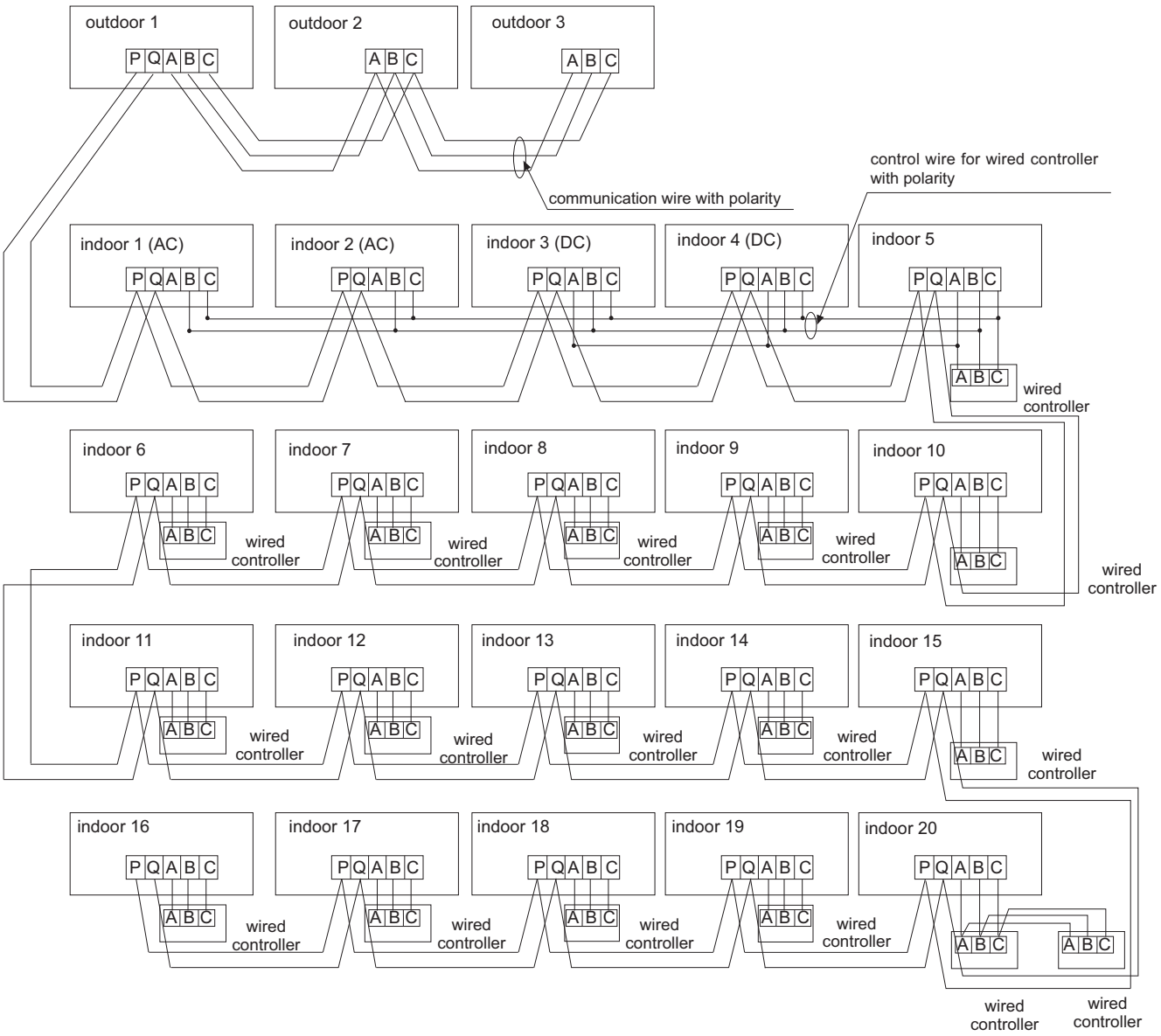

Outdoor units are of parallel connection via three lines with polarity. The main unit, central control and all indoor units are of parallel connection via two lines without polarity.

There are three connecting ways between line control and indoor units:

A. One wired controller controls multiple units, i.e. 2-16 indoor units, as shown in the above figure, (1-5 indoor units). The indoor unit 5 is the line-controlled main unit and others are the ine-controlled sub units. The remoter control and the main unit (directly connected to the indoor unit of wired controller) are connected via three lines with polarity. Other indoor units and the main unit are connected via two lines or three lines with polarity (If the PCB of indoor is DC, the wired controller needs to be connected to ABC, while the PCB of indoor is AC, the wired controller only connects to BC.). SW01 on the main unit of line control is set to 0 while SW01 on other sub units of line control are set to 1, 2, 3 and so on in turn.

B. One wired controller controls one indoor unit, as shown in the above figure (indoor unit 6-19). The indoor unit and the wired controller are connected via three lines with polarity.

C. Two wired controllers control one indoor unit, as shown in the figure (indoor unit 20). Either of the wired controllers can be set to be the master wired controller while the other is set to be the auxiliary wired controller. The master wired controller and indoor units, and the master and auxiliary wired controllers are connected via three lines with polarity.

When the indoor units are controlled by the remote control, switch over the modes by Switching Mode of Line-Controlled Main Unit/ Line-Controlled Sub Units/ Remote-Controlled Types. The signal terminals needn't to be equipped with wires and connected to the line control.

Electrical Wiring

Indoor power supply wiring & signal wiring between indoor and outdoor & signal wiring between indoors.

Items / Total Current of Indoor Units(A)	Cross Section (mm^2)	Length (m)	Rated Current of Overflow Breaker(A)	Rated current of residual Circuit Breaker(A) Ground Fault Interruptor(mA) Response time(S)	Cross Sectional Area of Signal Line	
					Outdoor -indoor (mm^2)	Indoor -indoor (mm^2)
<7	2.5	20	10	10 A,30 mA,0.1S or below		
≥7 and <11	4	20	16	16 A,30 mA,0.1S or below	2 cores×0.75-2.0 mm^2 shielded lin	
≥11and <16	6	25	20	20 A,30 mA,0.1S or below		
≥16 and <22	8	30	32	32 A,30 mA,0.1S or below		
≥22 and <27	10	40	32	32 A,30 mA,0.1S or below		

- The electrical power line and signal lines must be fastened tightly.
- Every indoor unit must have the ground connection.
- The power line should be enlarged if it exceeds the permissible length.
- Shielded lays of all the indoor and outdoor units should be connected together, with the shielded lay at the side of signal lines of outdoor units grounded at one point.
- It is not permissible if the whole length of signal line exceeds 1000m.

Signal Wiring of Wired controller

Length of Signal Line (m)	Wiring Dimensions
⩽250	$0.75mm^2 \times 3$ core shielding line

※ The shielding lay of the signal line must be grounded at one end.
※ The total length of the signal line shall not be more than 250m.

Electrical Wiring

Dipswitch Setting

•The dipswitch is dialed to "On" position with the overline at the state of strapping if the code or overline status is “1” The dipswitch is dialed to "Off"position with the overline at the state of disconnection if the code or overline status is "0"

• In the table below, the choice in the box "☐" refers to the setting of the socket/overline before delivery.

Indoor Units PCB

In the following table, 1 represents On and 0 represents Off.

Definition principles of code switches:

SW01 is used to set wire controlled address of and set capabilities of master;SW03 is used to set indoor unit address (combine original communication address and address of centralized controller)

(A) Definition and description of SW01

		[1]	[2]	[3]	[4]	Address of wire controlled indoor unit (group address)
SW01_1 SW01_2 SW01_3 SW01_4	Address of wire controlled indoor unit (group address)	0	0	0	0	0# (wire controlled master unit) (default)
		0	0	0	1	1# (wire controlled slave unit)
		0	0	1	1	2# (wire controlled slave unit)
		0	0	1	1	3# (wire controlled slave unit)
		…	…	…	…	……
		1	1	1	1	15# (wire controlled slave unit)
SW01_5 SW01_6 SW01_7 SW01_8	Capability of indoor unit	[5]	[6]	[7]	[8]	Capability of indoor unit
		0	0	0	0	0.6HP
		0	0	0	1	0.8HP
		0	0	1	0	1.0HP
		0	0	1	1	1.2HP
		0	1	0	0	1.5HP
		0	1	0	1	1.7HP
		0	1	1	0	2.0HP
		0	1	1	1	2.5HP
		1	0	0	0	3.0HP
		1	0	0	1	3.2HP
		1	0	1	0	4.0HP
		1	0	1	1	5.0HP
		1	1	0	0	6.0HP
		1	1	0	1	8.0HP
		1	1	1	0	10.0HP
		1	1	1	1	15.0HP

Note : A wired controller can connected to at most sixteen ultrathin air-duct indoor units.

(B) Definition and description of SW03

SW03_1	Address setting mode	0	Automatic address setting or wired controller address setting (default)							
		1	Code-set address							
SW03_2 ~ SW03_8	Code-set indoor unit address and centralized controller address (Note 2)	2	3	4	5	6	7	8	Address of indoor unit	Address of centralized controller
		0	0	0	0	0	0	0	0# (Default)	0# (Default)
		0	0	0	0	0	0	1	1#	1#
		0	0	0	0	0	1	0	2#	2#
		…	…	…	…	…	…	…	…	…
		0	1	1	1	1	1	1	63#	63#
		1	0	0	0	0	0	0	0#	64#
		1	0	0	0	0	0	1	1#	65#
		1	0	0	0	0	1	0	2#	66#
		…	…	…	…	…	…	…	…	…
		1	1	1	1	1	1	1	63#	127#

Note 2:

•Set the address by code when connecting the centralized controller or gateway or charge system.

•Address of centralized controller =communication address + 0 or +64.

SW03_ 2=OFF, address of centralized controller =communication address+0=communication address

SW03_ 2=ON, address of centralized controller=communication address+64 (applies when centralized controller is used and there are more than 64 indoor units)

•To use with 0010451181A in use, it is required to use code for address setting. Set SW03_1=0N and SW03_ 2=OFF; SW03_3, SW03_ 4, SW03_5, SW03_6, SW03_7 and SW03_ 8 are address codes which are set according to actual address.

Test Run & Fault Code

Before Test Run

- Before switching it on, test the supply terminal tier (L, N terminals) and grounding points with 500V megaohm meter and check if the resistance is above 1MΩ. It can't be operated if it is below 1MΩ.
- Connect it to the power supply of outdoor units to energize the heating belt of the compressor. To protect the compressor at startup, power it on 12 hours prior to the operation.

Check if the arrangements of the drainpipe and connection line are correct.
The drainpipe shall be placed at the lower part while the connection line placed at the upper part. Heat preservation measures should be taken such as winding the drainpipe esp. in the indoor units with heating insulating materials.
The drain pipe should be made a slope type to avoid protruding at the upper part and concaving at the lower part on the way.

Checkup of Installation

□ check if the mains voltage is matching

□ check if there is air leakage at the piping joints

□ check if the connections of mains power and indoor & outdoor units are correct

□ check if the serial numbers of terminals are matching

□ check if the installation place meets the requirement

□ check if there is too much noise

□ check if the connecting line is fastened

□ check if the connectors for tubing are heat insulated

□ check if the water is drained to the outside

□ check if the indoor units are positioned

Ways of Test Run

Do ask the installation personnel to make a test run. Take he testing procedures according to the manual and check if the temperature regulator works properly.
When the machine fails to start due to the room temperature, the following procedures can be taken to do the compulsive running. The function is not provided for the type with remote control.

- Set the wired controller to refrigerating/heating mode, press "ON/OFF" button for 5 seconds to enter into the compulsive refrigerating/heating mode. Repress "ON/OFF" button to quit the compulsive running and stop the operation of the air conditioner.

Test Run & Fault Code

Malfunction code sheet

Malfunction	Flash times of malfunction lamp	Error code	Note
Fault of indoor unit ambient temp. transducer TA	1	01	Resumable
Fault of indoor unit pipe temp. transducer TC1	2	02	Resumable
Fault of indoor unit pipe temp. transducer TC2	3	03	Resumable
/	4	04	
Fault of indoor unit EEPROM	5	05	Unresumable
Fault of communication between indoor & outdoor units	6	06	Alarm after continuous can't communicate with outdoor units for 3-minute, resumable
Fault of communication between indoor and wired controller	7	07	Resumable
Drainage malfunction	8	08	Resumable
Fault of duplicate indoor unit address	9	09	Unresumable
50Hz Zreo-crossing	12	12	/
Communication error with 849 & 807	13	13	/
Fault of DC motor	14	14	/
Fault of BS valve box or 4MV Reverse	18	18	/
Fault of Move eye	19	19	/
Fault from outdoor uint	20	20	/

Move and scrap the air conditioning

- When moving, to disassemble and re-install the air conditioning, please contact your dealer for technical support.
- In the composition material of air conditioning, the content of lead, mercury, hexavalent chromium, polybrominated biphenyls and polybrominated diphenyl ethers are not more than 0.1% (mass fraction) and cadmium is not more than 0.01% (mass fraction).
- Please recycle the refrigerant before scrapping, moving, setting and repairing the air conditioning; for the air conditioning scrapping, should be dealt with by the qualified enterprises.

Qingdao Haier Air Conditioner Electric Co.,Ltd.

Haier Industrial Park,Qianwangang Road,Eco-Tech Development Zone,
Qingdao 266555,Shandong,P.R.C.